Distributed Gate Thyristor Type SA14MP2714EH

SANCONA®
technical solutions

Contact us!

Date: September, 2020
Data Sheet Issue: 1

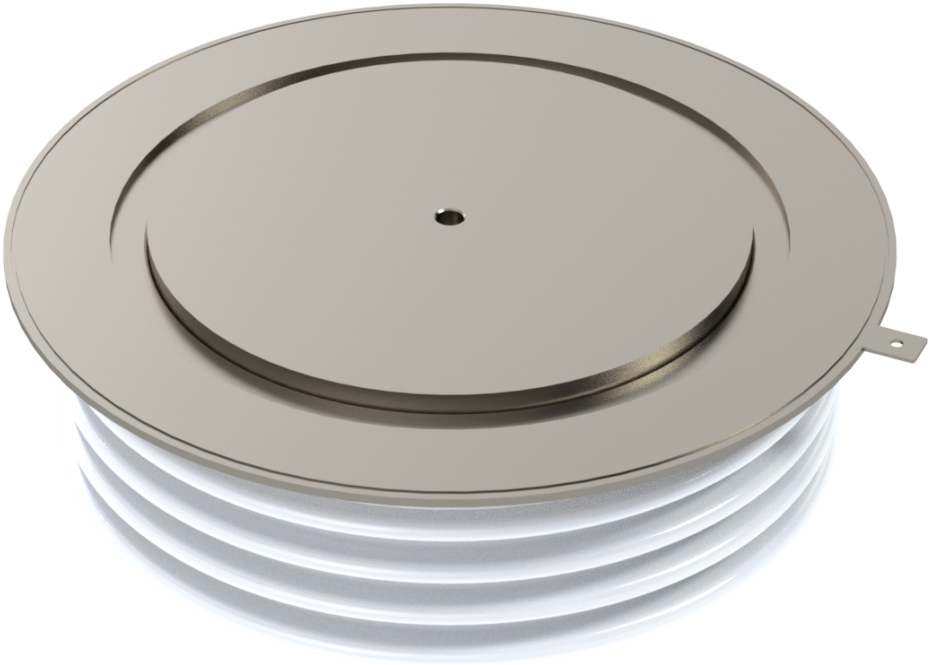

ORDERING INFORMATION						(Please quote 12 to 15 digit code as below)
SA	14	MP	2714	E	H	
-	Voltage Code	Outline Code	Current code	Type code	t_q code	Optional code
t_q code: H = 40µs, J = 50µs, K = 60µs						

Find more!

Explore the full range of our semiconductor portfolio online

Absolute Maximum Ratings

	VOLTAGE RATINGS	MAXIMUM LIMITS	UNITS
V_{DRM}	Repetitive peak off-state voltage, (note 1)	1400	V
V_{DSM}	Non-repetitive peak off-state voltage, (note 1)	1400	V
V_{DDC}	Maximum DC of-state voltage, (note 1)	930	V
V_{RRM}	Repetitive peak reverse voltage, (note 1)	1400	V
V_{RSM}	Non-repetitive peak reverse voltage, (note 1)	1500	V
V_{RDC}	Maximum DC revrese voltage, (note 1)	930	V
note 1)	De-rating factor of 0.13%/°C is applicable for T_j below 25°C		

	OTHER RATINGS	MAXIMUM LIMITS	UNITS
$I_{T(AV)M}$	Maximum average on-state current, T_{sink} = 55°C, (note 1)	2714	A
$I_{T(AV)M}$	Maximum average on-state current, T_{sink} = 85°C, (note 1)	1828	A
$I_{T(AV)M}$	Maximum average on-state current, T_{sink} = 85°C, (note 2)	1078	A
$I_{T(RMS)}$	Nominal RMS on-state current, T_{sink} = 25°C (note 1)	5411	A
$I_{T(d.c.)}$	D.C. on-state current, T_{sink} = 25°C, (note 3)	4561	A
I_{TSM}	Peak non-repetitive surge current t_p = 10ms, V_{RM} = 60%V_{RRM}, (note4)	35.6	kA
I_{TSM2}	Peak non-repetitive surge current t_p = 10ms, $V_{RM} \leq$ 10V, (note 4)	39.0	kA
I^2t	I^2t capacity for fusing t_p = 10ms, V_{RM} = 60%V_{RRM}, (note 4)	$6.34 \cdot 10^6$	A^2s
I^2t	I^2t capacity for fusing t_p = 10ms, $V_{RM} \leq$ 10V, (note 4)	$7.61 \cdot 10^6$	A^2s
$(di/dt)_{cr}$	Critical rate of rise of on-state current (repetitive), (note 5)	1000	A/µs
	Critical rate of rise of on-state current (non repetitive), (note 5)	1500	A/µs
V_{RGM}	Peak reverse gate voltage	5	V
$P_{G(AV)}$	Mean forward gate power	5	W
P_{GM}	Peak forward gate power	30	W
T_{jop}	Operating temperature range	-40 to +125	°C
T_{stg}	Storage temperature range	-40 to +150	°C
note 1)	Double-side cooled, single phase, 50Hz, 180° half-sinewave.		
note 2)	Single-side cooled, single phase, 50Hz, 180° half-sinewave.		
note 3)	Double-side cooled		
note 4)	Half-sinewave, 125°C T_j initial		
note 5)	V_D = 67%V_{DRM}, I_{FG} = 2A, $t_R \leq$ 0.5µs, T_{case} = 125°C		

Characteristics

	PARAMETER	TEST CONDITIONS	MIN	TYP	MAX	UNITS
V_{TM}	Maximum peak on-state voltage	I_{TM} = 4000A	-	-	1.9	V
V_{T0}	Threshold voltage		-	-	1.25	V
r_T	Slope resistance		-	-	0.163	mΩ
$(dv/dt)_{CR}$	Critical rate of rise of off-state voltage	V_D = 80%V_{DRM}, Linear ramp, Gate o/c	200	-	-	V/µs
I_{DRM}	Peak off-state current	Rated V_{DRM}	-	-	300	mA
I_{RRM}	Peak reverse current	Rated V_{RRM}	-	-	300	mA
V_{GT}	Gate trigger voltage	T_j = 25°C, V_D = 10V, I_T = 3A	-	-	3.0	V
I_{GT}	Gate trigger current		-	-	200	mA
V_{GD}	Gate non-trigger voltage	Rated V_{DRM}	-	-	0.25	V
I_H	Holding current	T_j = 25°C	-	-	1000	mA
t_{GD}	Gate controlled turn-on delay time	V_D = 67%V_{DRM}, I_{TM} = 1000A, di/dt = 60A/µs, I_{FG} = 2A, t_r = 0.5µs, T_j = 25°C	-	1.0	2.0	µs
t_{GT}	Turn-on time		-	2.0	3.0	µs
Q_{RR}	Recovered charge	I_{TM} = 4000A, t_p = 1000µs,di/dt = 60A/µs, V_R = 50V	-	1400	-	µC
Q_{RA}	Recovered charge, 50% Chord		-	700	920	µC
I_{RM}	Reverse recovery current		-	190	-	A
t_{RR}	Reverse recovery time		-	7.0	-	µs
t_{GQ}	Turn-off time (note 2)	I_{TM} = 4000A, t_p = 1000µs, di/dt = 60A/µs, V_R = 50V, V_{DR} = 33%V_{DRM}, dV_{DR}/dt = 20V/µs	35	-	55	µs
		I_{TM} = 4000A, t_p = 1000µs, di/dt = 60A/µs, V_R = 50V, V_{DR} = 33%V_{DRM}, dV_{DR}/dt = 200V/µs	40	-	60	µs
R_{thJK}	Thermal resistance, junction to sink (note 3)	Double-side cooled	-	-	0.011	K/W
		Single-side cooled	-	-	0.022	K/W
F	Mounting force	(note 3)	27	-	47	kN
W_t	Weight		-	1700	-	g

note 1) Unless otherwise indicated T_j = 125°C

note 2) The required t_Q (specified with dV_{DR}/dt = 200V/µs) is 40µs

note 3) For other clamp forces, please consult factory

Request full technical data sheet via e-mail, free of charge:

Order Now!

Outline Drawing

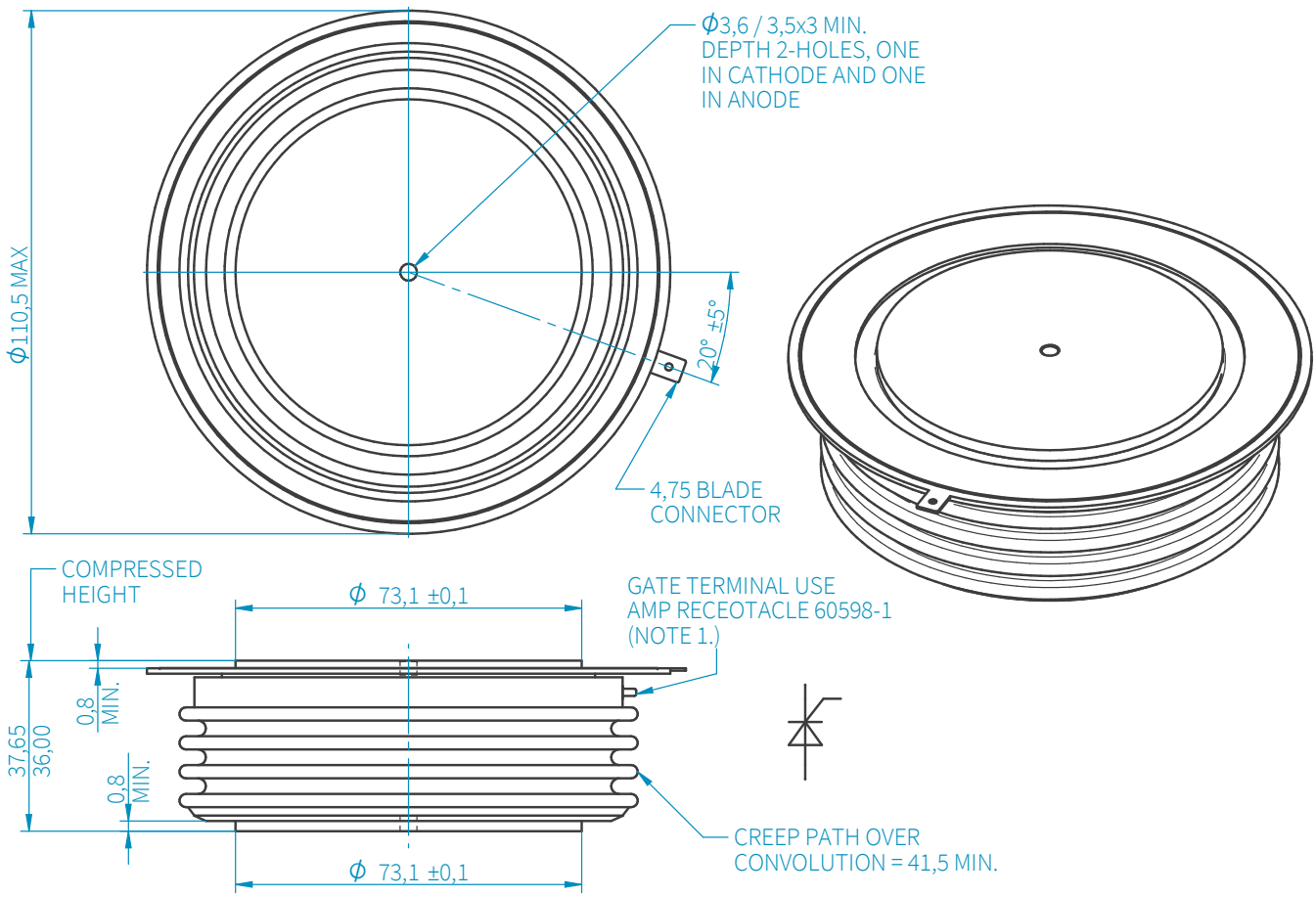

SANCONA®
technical solutions

SANCONA GmbH
An der Hebemärchte 26
D-04316 Leipzig

// +49 341 652355-0
+49 341 652355-99
info@sancona.com
www.sancona.com

// Registry Court: Leipzig HRB 32946
VAT Reg No.: DE308741810
Tax number: 232/118/085686

The information contained herein is confidential and is protected by Copyright. The information may not be used or disclosed except with written permission of and in the manner permitted by the proprietors SANCONA GmbH. In the interest of product improvement, SANCONA reserves the right to change specifications at any time without prior notice. Devices with a suffix code (2-letter, 3-letter or letter/digit/letter combination) added to their generic code are not necessarily subject to the conditions and limits contained in this report.

©SANCONA GmbH