Rectifier
Diode
Type SA16IP3697J0

SANCONA®
technical solutions

Contact us!

Date: April, 2020
Data Sheet Issue: 1

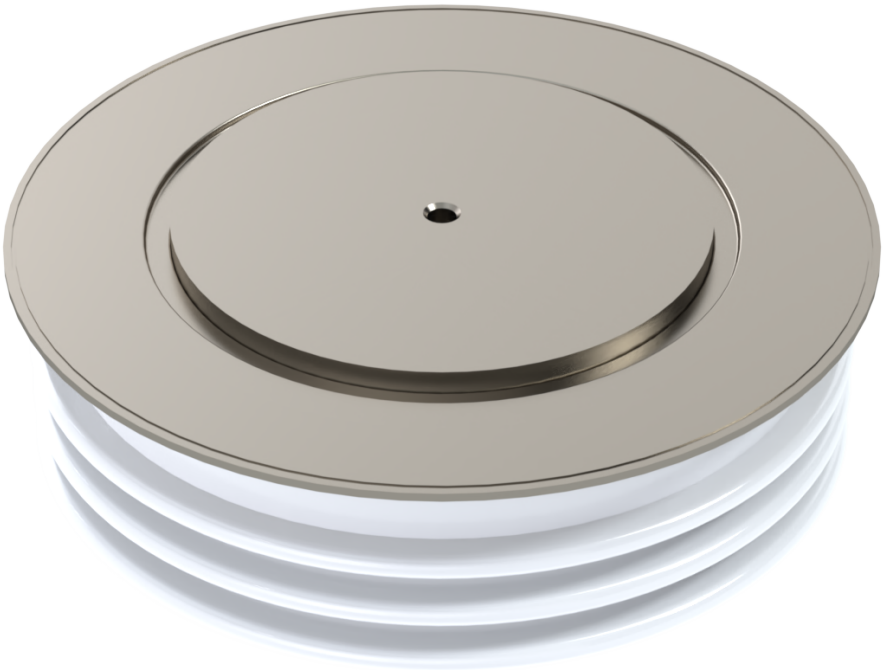

ORDERING INFORMATION				(Please quote 12 to 15 digit code as below)		
SA	16	IP	3697	J	0	
-	Voltage Code	IP = standard capsule IG = rupture rated capsule	Current code	Type code	Special code	Optional code

Find more!

Explore the full range of our semiconductor portfolio online

Absolute Maximum Ratings

	VOLTAGE RATINGS	MAXIMUM LIMITS	UNITS
V_{RRM}	Repetitive peak reverse voltage, (note 1)	1600	V
V_{RSM}	Non-repetitive peak reverse voltage, (note 1)	1700	V
V_{RDC}	Maximum reverse D.C. Voltage, (note 1)	1050	V
note 1)	De-Rating factor of 0.13% per °C is applicable for T_j below 25°C		

	OTHER RATINGS	MAXIMUM LIMITS	UNITS
$I_{F(AV)M}$	Maximum average forward current, T_{sink} = 55°C, (note 1)	3697	A
$I_{F(AV)M}$	Maximum average forward current, T_{sink} = 100°C, (note 1)	2530	A
$I_{F(AV)M}$	Maximum average forward current, T_{sink} = 100°C, (note 2)	1520	A
$I_{F(RMS)}$	Nominal RMS forward current, T_{sink} = 25°C (note 1)	6840	A
$I_{f(d.c.)}$	D.C. forward current, T_{sink} = 25°C (note 3)	5840	A
I_{FSM}	Peak non-repetitive surge current t_p = 10ms, V_{RM} = 60%V_{RRM}, (note 4)	40	kA
I_{FSM2}	Peak non-repetitive surge current t_p = 10ms, $V_{RM} \leq$ 10V, (note 4)	45	kA
I^2t	I^2t capacity for fusing t_p = 10ms, V_{RM} = 60%V_{RRM}, (note 4)	$8.0 \cdot 10^6$	A^2s
I^2t	I^2t capacity for fusing t_p = 10ms, $V_{RM} \leq$ 10V, (note 4)	$10.1 \cdot 10^6$	A^2s
T_{jop}	Operating temperature range	-55 to +160	°C
T_{stg}	Storage temperature range	-55 to +180	°C
note 1)	Double-side cooled, single phase, 50Hz, 180° half-sinewave.		
note 2)	Single-side cooled, single phase, 50Hz, 180° half-sinewave.		
note 3)	Double-side cooled.		
note 4)	Half-sinewave, 160°C T_j initial.		

Characteristics

	PARAMETER	TEST CONDITIONS	MIN	TYP	MAX	UNITS
V_{FM}	Maximum peak forward voltage	I_{FM}=6800A	-	-	1.54	V
		I_{FM}=11100A	-	-	1.95	V
V_{T0}	Threshold Voltage		-	-	0.86	V
r_T	Slope resistance		-	-	0.10	mΩ
I_{RRM}	Peak reverse current	Rated V_{RRM}	-	-	60	mA
		Rated V_{RRM}, T_j = 25°C	-	-	60	mA
R_{thJK}	Thermal resistance, junction to heatsink	Double side cooled	-	-	0.016	K/W
		Single side cooled	-	-	0.032	K/W
F	Mounting force	note 2)	27	-	34	kN
W_t	Weight		-	1000	-	g
note 1)	Unless otherwise indicated T_j = 160°C					
note 2)	For other clamp forces consult factory					

Request full technical data sheet via e-mail, free of charge:

Order Now!

Outline Drawing

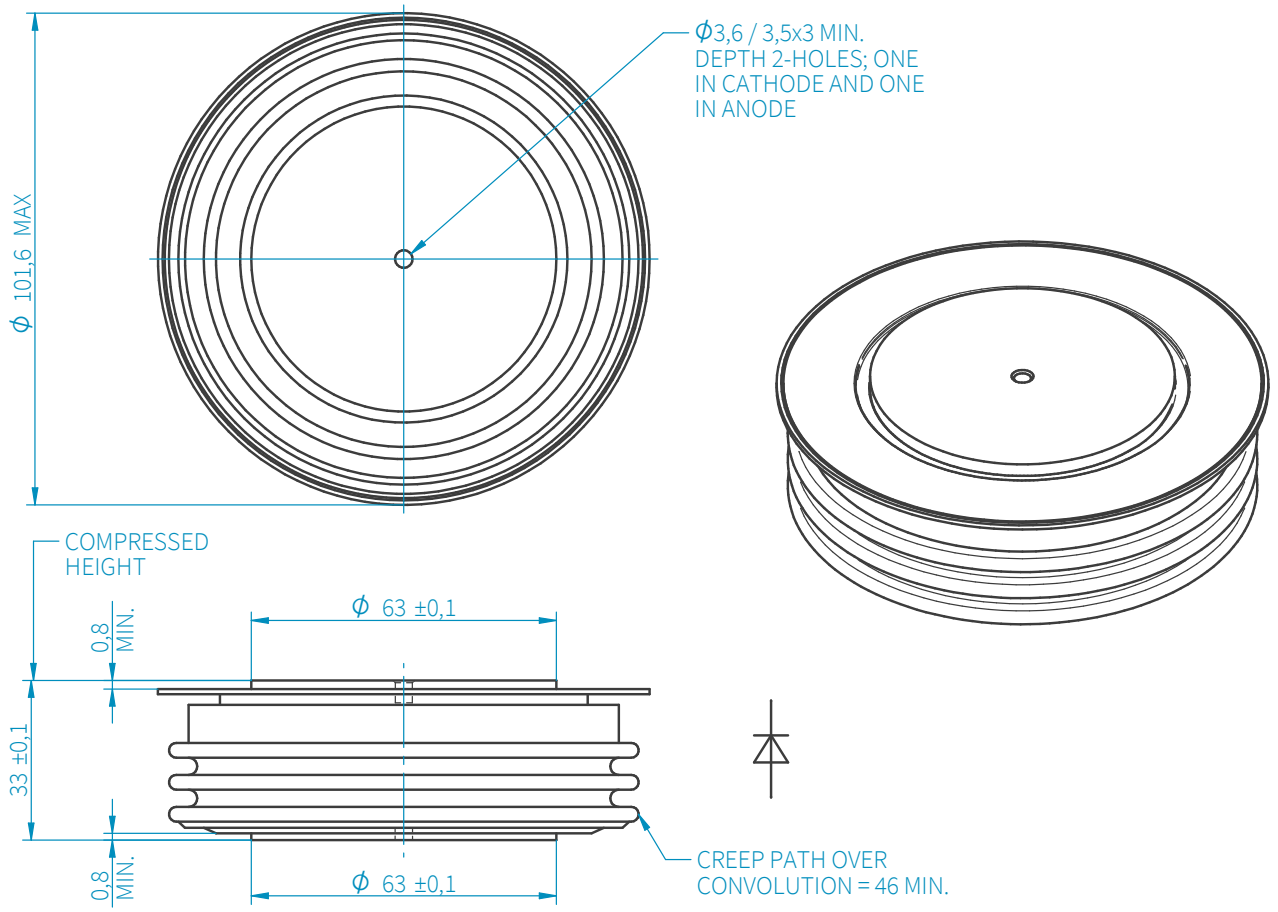

SANCONA®
technical solutions

SANCONA GmbH
An der Hebemärchte 26
D-04316 Leipzig

// +49 341 652355-0
+49 341 652355-99
info@sancona.com
www.sancona.com

// Registry Court: Leipzig HRB 32946
VAT Reg No.: DE308741810
Tax number: 232/118/085686

The information contained herein is confidential and is protected by Copyright. The information may not be used or disclosed except with written permission of and in the manner permitted by the proprietors SANCONA GmbH. In the interest of product improvement, SANCONA reserves the right to change specifications at any time without prior notice. Devices with a suffix code (2-letter, 3-letter or letter/digit/letter combination) added to their generic code are not necessarily subject to the conditions and limits contained in this report.

©SANCONA GmbH