High Power Sonic Fast Recovery Diode Type SA45UP1250RE

SANCONA®
technical solutions

Contact us!

Date: August, 2020
Data Sheet Issue: 1

ORDERING INFORMATION						(Please quote 12 to 15 digit code as below)
SA	45	UP	1250	R	E	
-	Voltage Code	Outline Code	Current code	Type code	Special code	Optional code

Find more!

Explore the full range of our semiconductor portfolio online

Absolute Maximum Ratings

	VOLTAGE RATINGS	MAXIMUM LIMITS	UNITS
V_{RRM}	Repetitive peak reverse voltage, (note 1)	4500	V
V_{RSM}	Non-repetitive peak reverse voltage, (note 1)	4600	V
V_{RDC}	Maximum reverse D.C. Voltage, (note 1)	2800	V
note 1)	De-Rating factor of 0.13% per °C is applicable for T_j below 25°C		

	OTHER RATINGS	MAXIMUM LIMITS	UNITS
$I_{F(AV)M}$	Mean forward current, T_{sink} = 55°C, (note 1)	1355	A
$I_{F(AV)M}$	Mean average forward current, T_{sink} = 100°C, (note 1)	845	A
$I_{F(AV)M}$	Mean average forward current, T_{sink} = 100°C, (note 2)	438	A
$I_{F(AV)M}$	Mean average forward current, T_{sink} = 100°C, (note 3)	605	A
$I_{F(RMS)}$	Nominal RMS forward current, T_{sink} = 25°C (note 1)	2550	A
$I_{f(d.c.)}$	D.C. forward current, T_{sink} = 25°C (note 4)	1623	A
I_{FSM}	Peak non-repetitive surge current t_p = 10ms, V_{RM} = 60%V_{RRM}, (note 5)	20.5	kA
I_{FSM2}	Peak non-repetitive surge current t_p = 10ms, $V_{RM} \leq$ 10V, (note 5)	22.6	kA
I^2t	I^2t capacity for fusing t_p = 10ms, V_{RM} = 60%V_{RRM}, (note 5)	$2.11 \cdot 10^6$	A^2s
I^2t	I^2t capacity for fusing t_p = 10ms, $V_{RM} \leq$ 10V, (note 5)	$2.55 \cdot 10^6$	A^2s
P_{rr}	Maximum non-repetitive peak reverse recovery power, (note 7)	6.2	MW
T_{jop}	Operating temperature range	-40 to +140	°C
T_{stg}	Storage temperature range	-40 to +150	°C
note 1)	Double-side cooled, single phase, 50Hz, 180° half-sinewave.		
note 2)	Anode side cooled, single phase, 50Hz, 180° half-sinewave.		
note 3)	Cathode side cooled, single phase, 50Hz, 180° half-sinewave.		
note 4)	Double-side cooled.		
note 5)	Half-sinewave, 140°C T_j initial.		
note 6)	Current (I_F) ratings have been calculated using V_{T0} and r_T (see page 3)		
note 7)	$T_j = T_{jop}$, I_F = 1250A, di/dt = 2000A/µs, V_r = 2800V, and L_s = 230nH. Test circuit and sample waveform are shown in diagram 1. IGBT type SA45RO1200GE used as switch.		

Characteristics

	PARAMETER	TEST CONDITIONS	MIN	TYP	MAX	UNITS
V_{FM}	Maximum peak forward voltage	I_{FM}=1250A	-	3.25	3.5	V
		I_{FM}=2500A	-	-	5.11	V
V_{T0}	Threshold Voltage	Current range 1355A - 4065A (note 2)	-	-	2.072	V
r_T	Slope resistance		-	-	1.166	mΩ
V_{T01}	Threshold Voltage	Current range 1250A - 3750A	-	-	2.01	V
r_{T1}	Slope resistance		-	-	1.193	mΩ
V_{FRM}	Maximum forward recovery voltage	di/dt = 3000A/µs	-	-	330	V
		di/dt = 3000A/µs, T_j = 25°C	-	-	170	V
I_{RRM}	Peak reverse current	Rated V_{RRM}	-	-	65	mA
		Rated V_{RRM}, T_j = 25°C	-	-	1.5	mA
Q_{rr}	Recovered charge	I_{FM} = 1250A, t_p = 1ms, di/dt = 2000A/µs, V_R = 2800V, 50% Chord. (note 3)	-	1850	2100	µC
Q_{ra}	Recovered charge, 50% Chord		-	600	-	µC
I_{rm}	Reverse recovery current		-	1000	1200	A
t_{rr}	Reverse recovery time, 50% Chord		-	1.20	-	µs
E_{rr}	Reverse recovery loss		-	3.7	4.2	J
R_{thJK}	Thermal resistance, junction to heatsink	Double side cooled	-	-	0.0105	K/W
		Anode side cooled	-	-	0.0274	K/W
		Cathode side cooled	-	-	0.0173	K/W
F	Mounting force	note 4)	32	-	40	kN
W_t	Weight		-	1.2	-	Kg

note 1)	Unless otherwise indicated T_j = 140°C
note 2)	V_{T0} and r_T were used to calculate the current ratings illustrated on page 2
note 3)	Figures 3-7 were compiled using these conditions. Test circuit and sample waveform are shown in diagram 1.
note 4)	For other clamp forces consult factory

Request full technical data sheet via e-mail, free of charge:

Order Now!

Outline Drawing

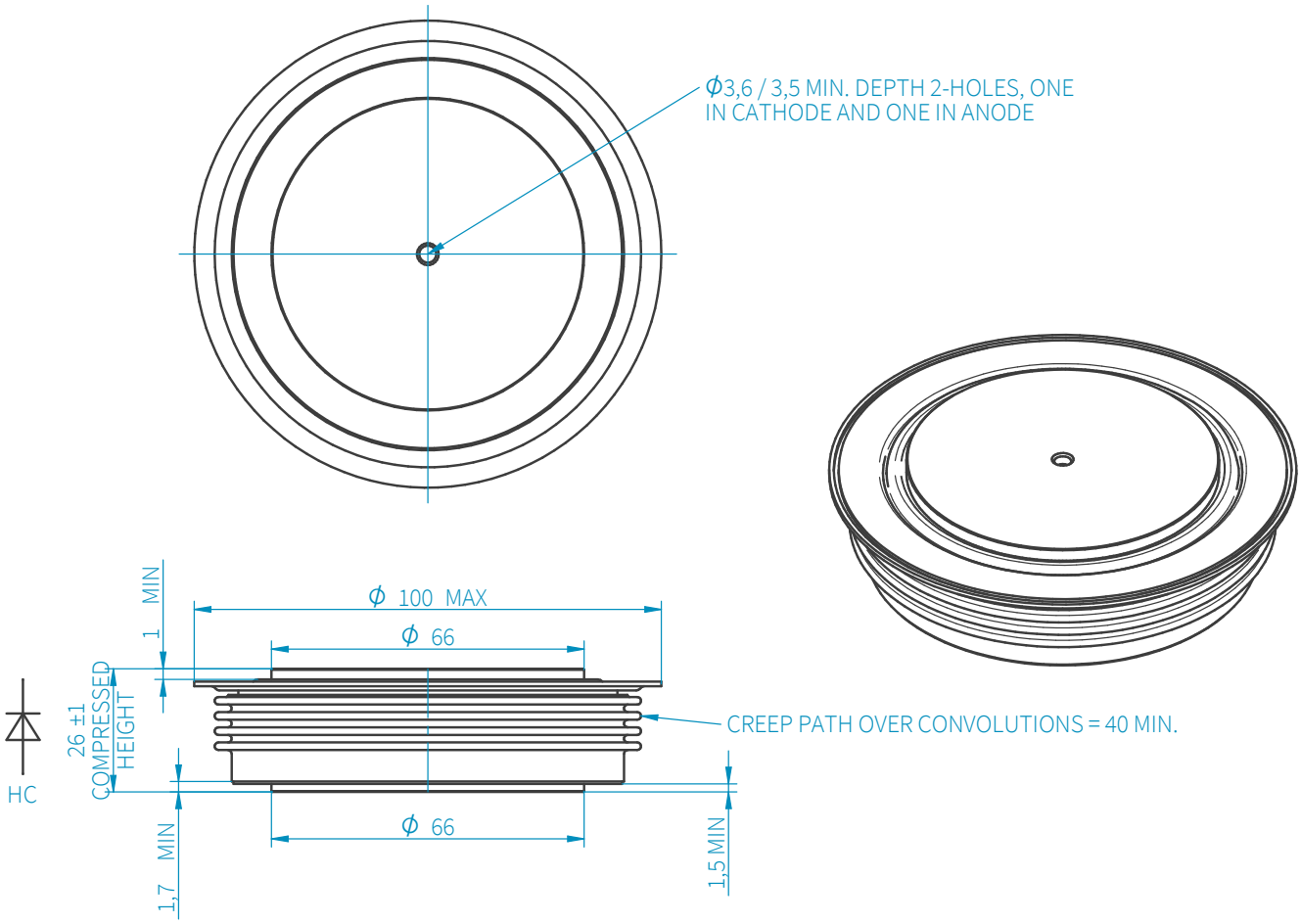

SANCONA®
technical solutions

SANCONA GmbH
An der Hebemärchte 26
D-04316 Leipzig

// +49 341 652355-0
+49 341 652355-99
info@sancona.com
www.sancona.com

// Registry Court: Leipzig HRB 32946
VAT Reg No.: DE308741810
Tax number: 232/118/085686

The information contained herein is confidential and is protected by Copyright. The information may not be used or disclosed except with written permission of and in the manner permitted by the proprietors SANCONA GmbH. In the interest of product improvement, SANCONA reserves the right to change specifications at any time without prior notice. Devices with a suffix code (2-letter, 3-letter or letter/digit/letter combination) added to their generic code are not necessarily subject to the conditions and limits contained in this report.

©SANCONA GmbH